TAMD163P-A

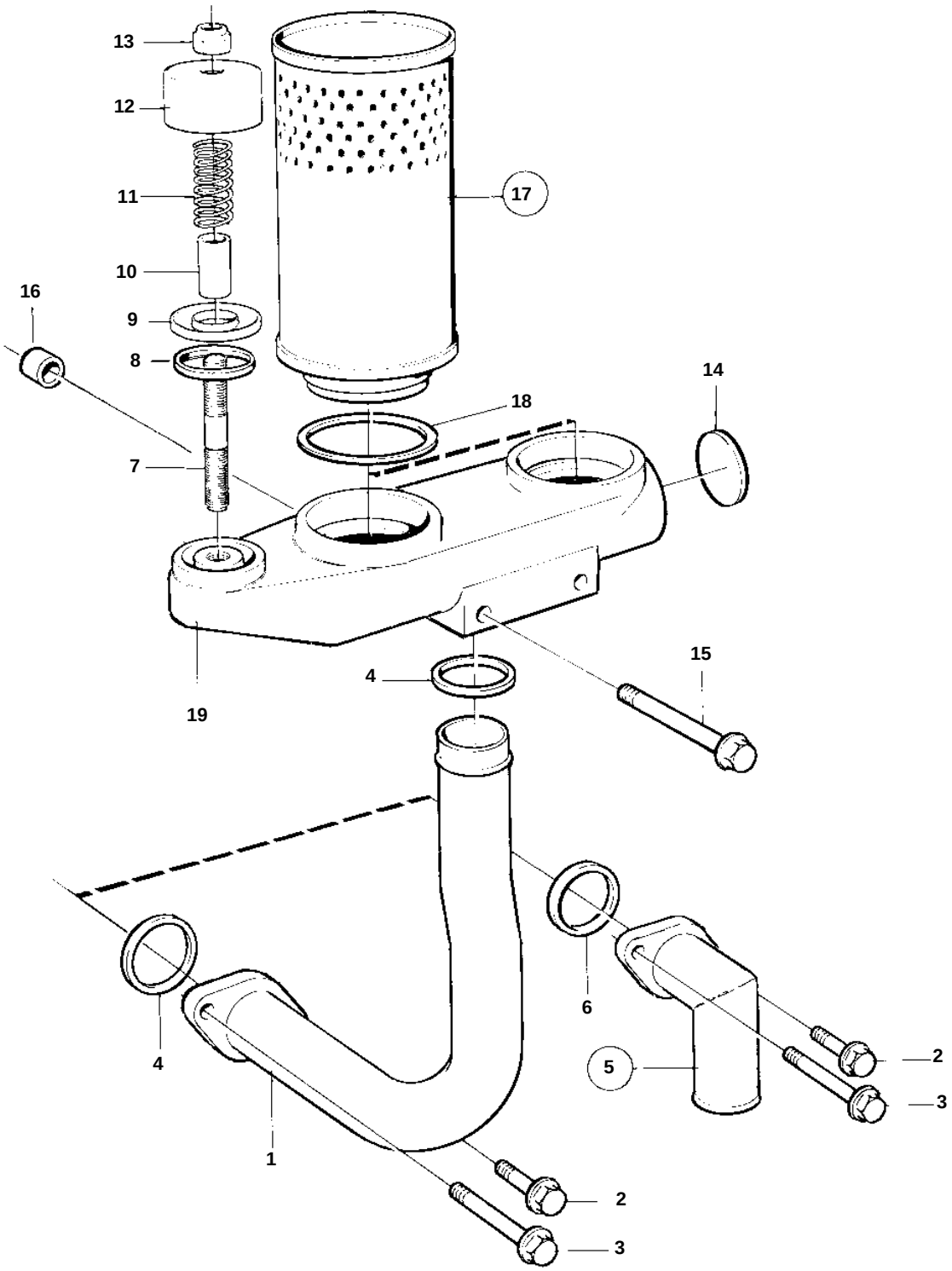

16413

TAMD163P-A

REF	PART NO.	QTY	DESCRIPTION	
1	866544	1	Breather pipe	
2	945444	1	Flange screw	
3	973924	1	Flange screw	
4	421158	2	Sealing ring	
5	1556486	1	Breather pipe	
6	421158	1	· Sealing ring	
7	924058	1	Stud	
8	421158	1	Sealing ring	
9	842972	1	Valve disc	
10	842974	1	Spacer sleeve	
11	843905	1	Spring	
12	842975	1	Cover	
13	949278	1	Lock nut	
14	955100	1	Plug	SO
15	965182	2	Flange screw	
16	807425	2	Sleeve	
17	876069	2	Filter	
18	843449	2	· Gasket	
19	3826199	1	Connector housing	